CODE: FK501W1000-MW
SIZE: 1000*455*485

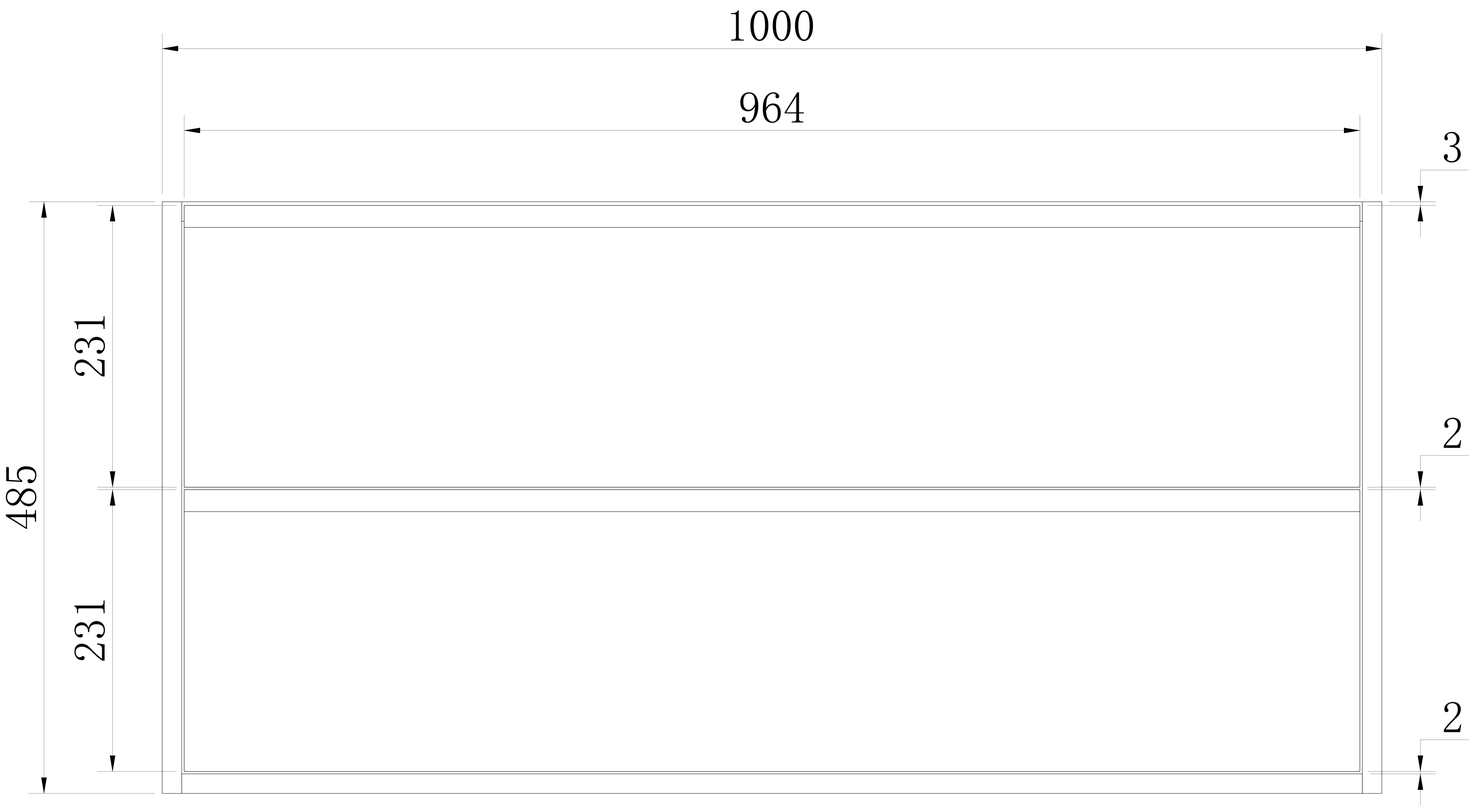

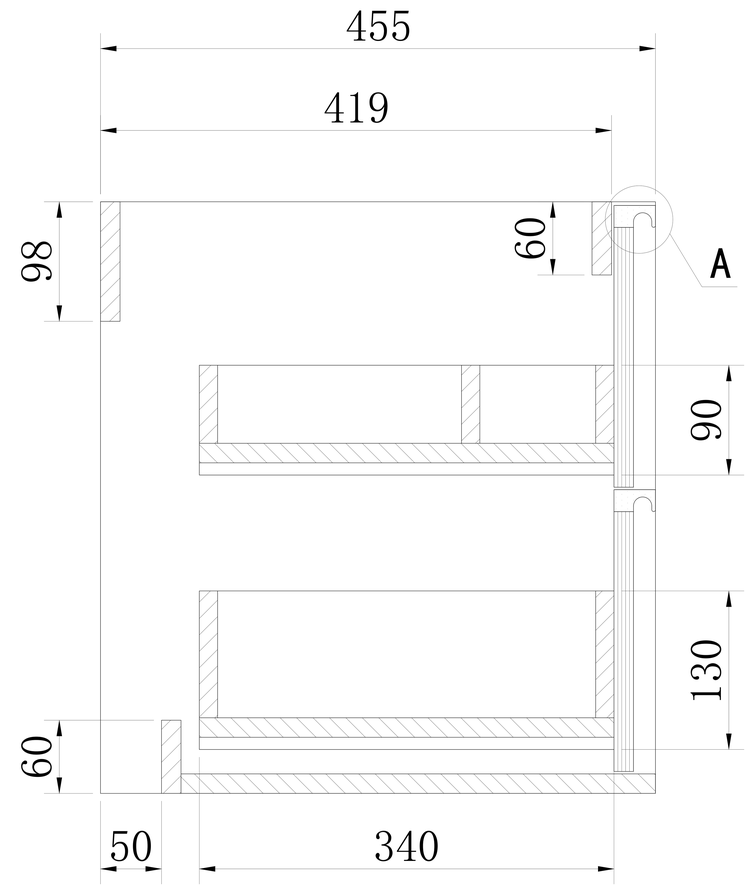

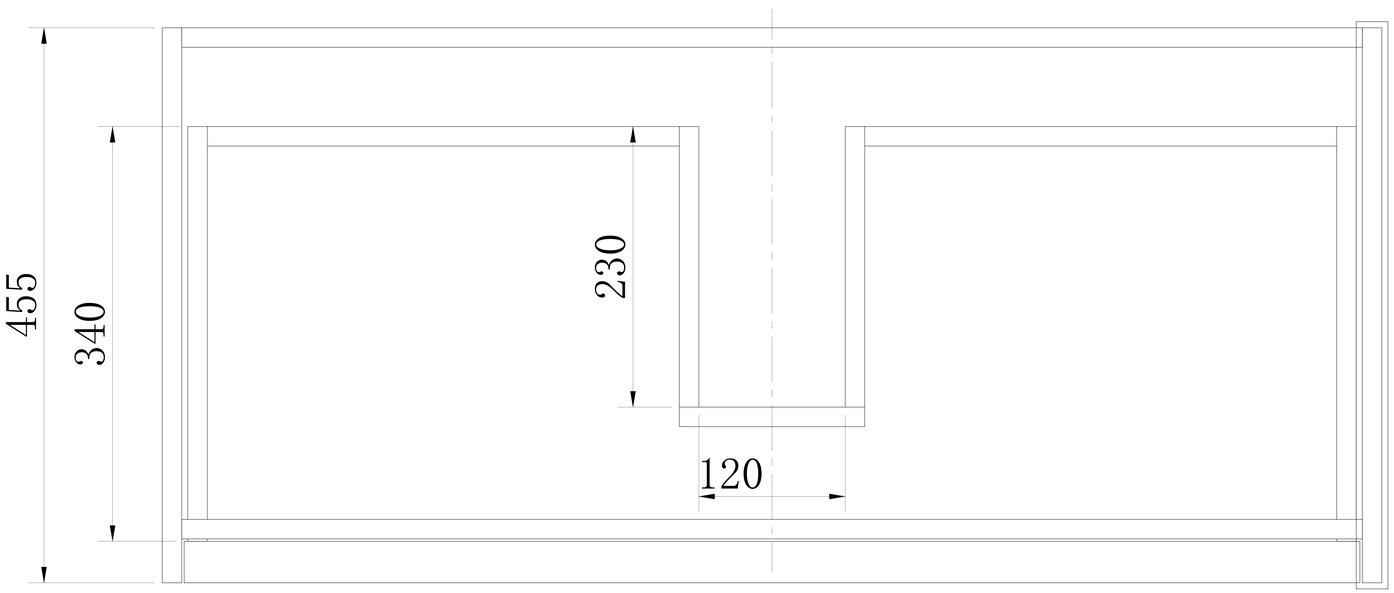

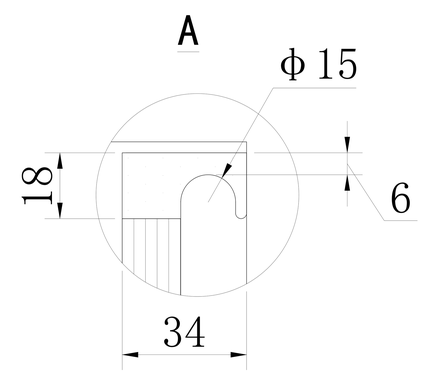
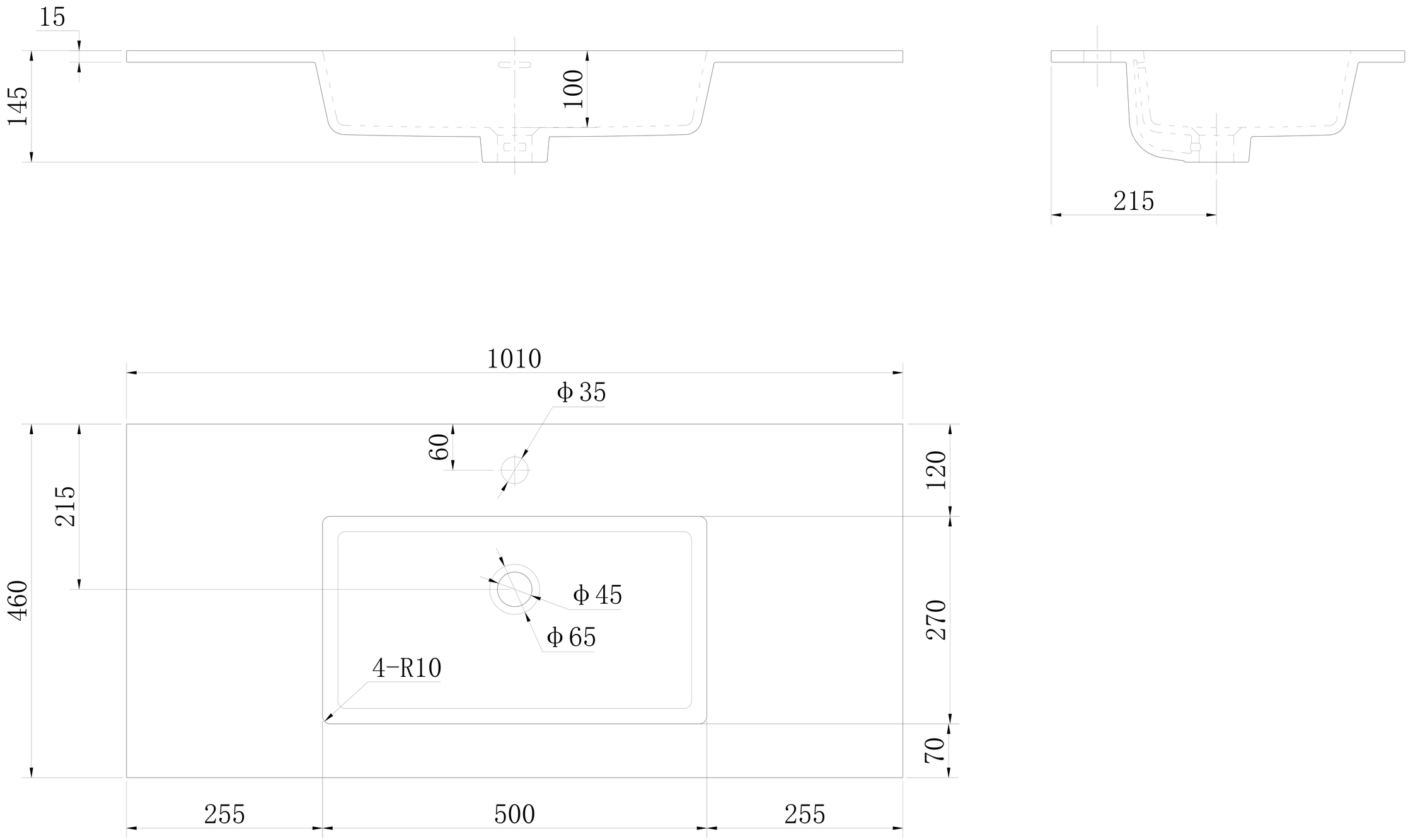
CODE: FS1041000
SIZE: 1010*460*145