CODE: FK502600-WO
SIZE: 597*455*400

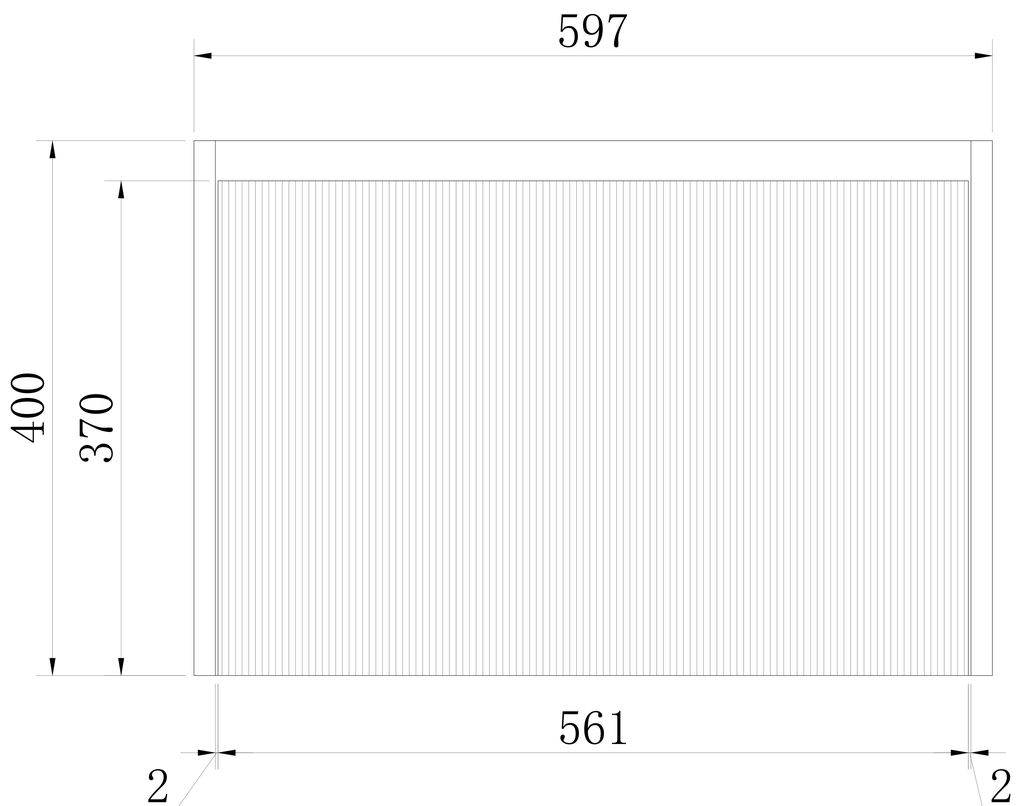


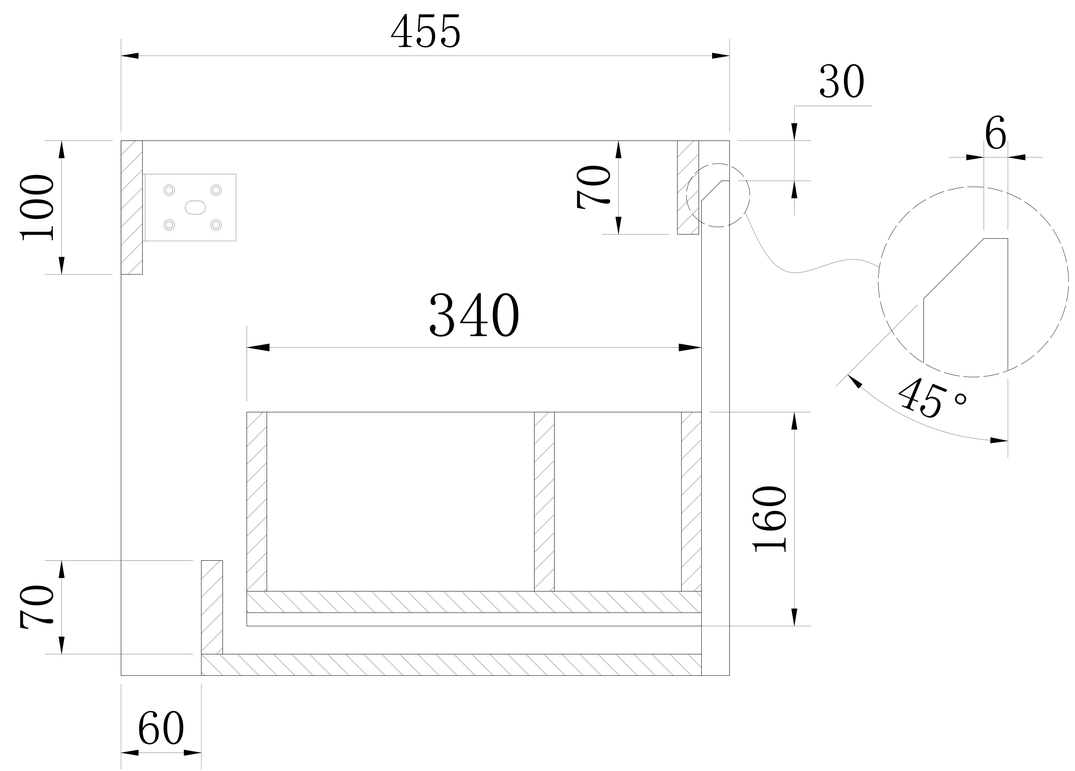


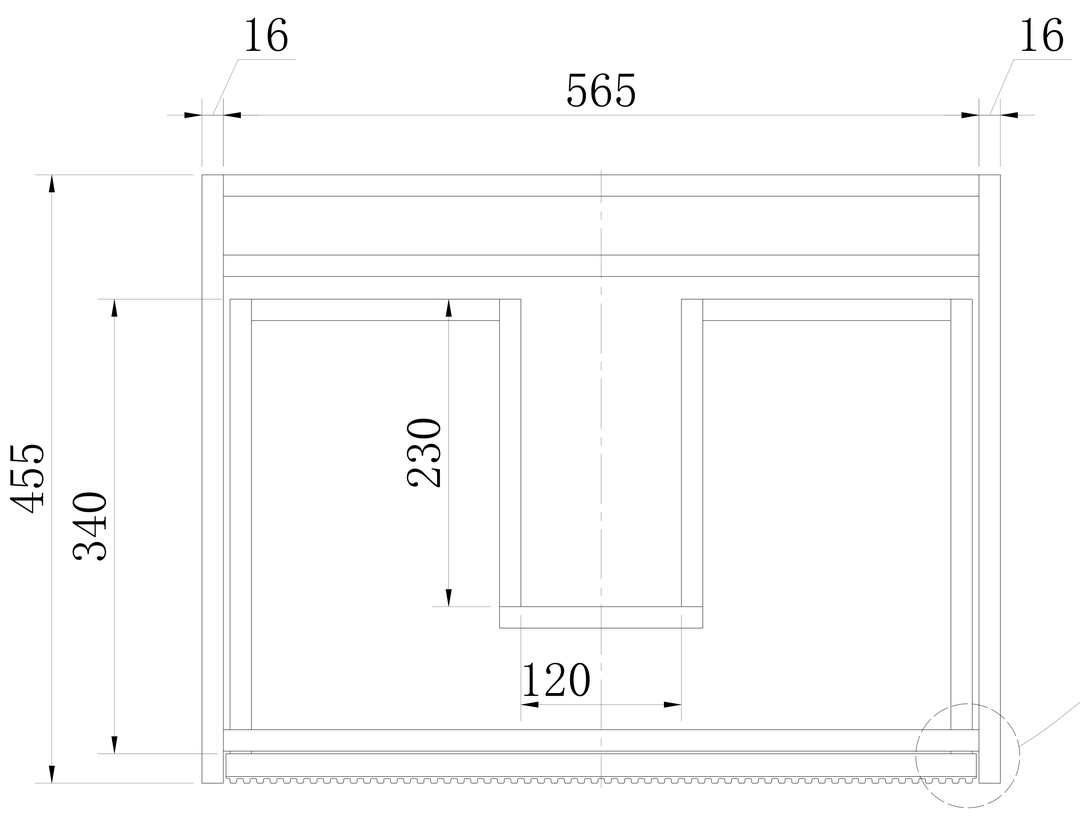


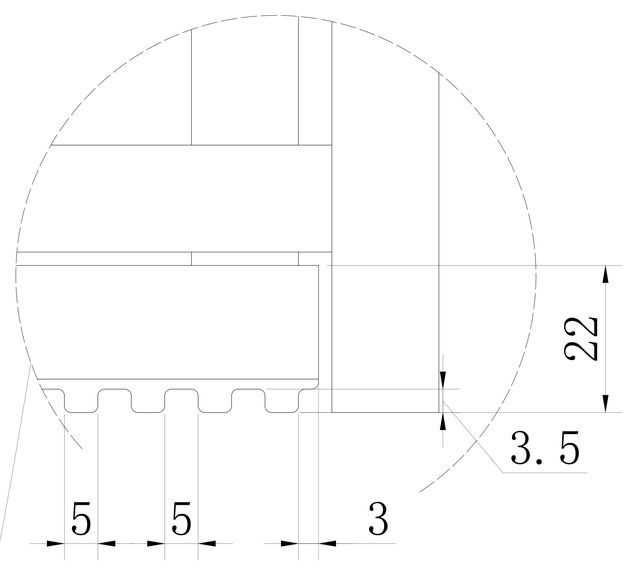
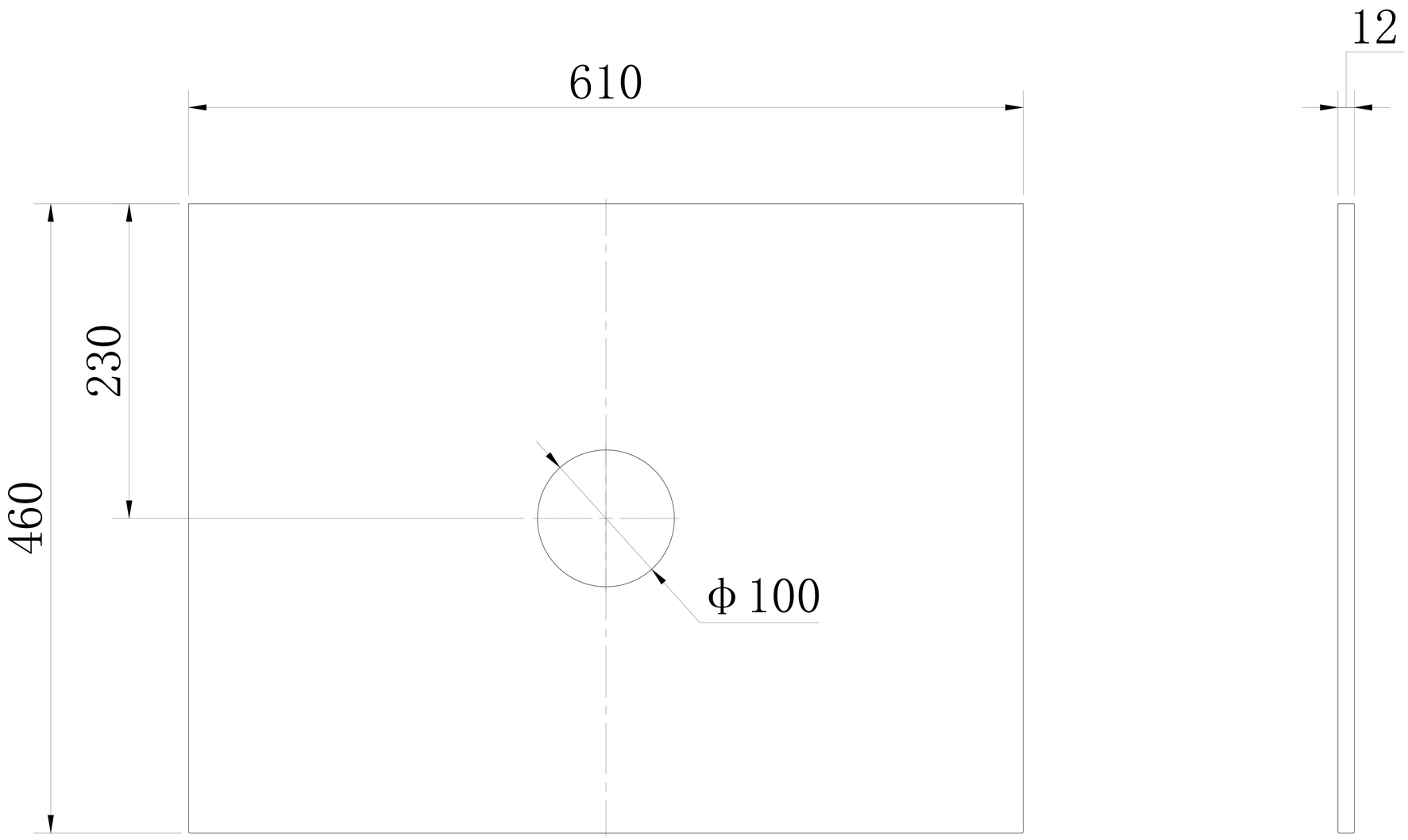
CODE：FKC-101-600
SIZE：610*460*12